CM-4300
HOME GYM

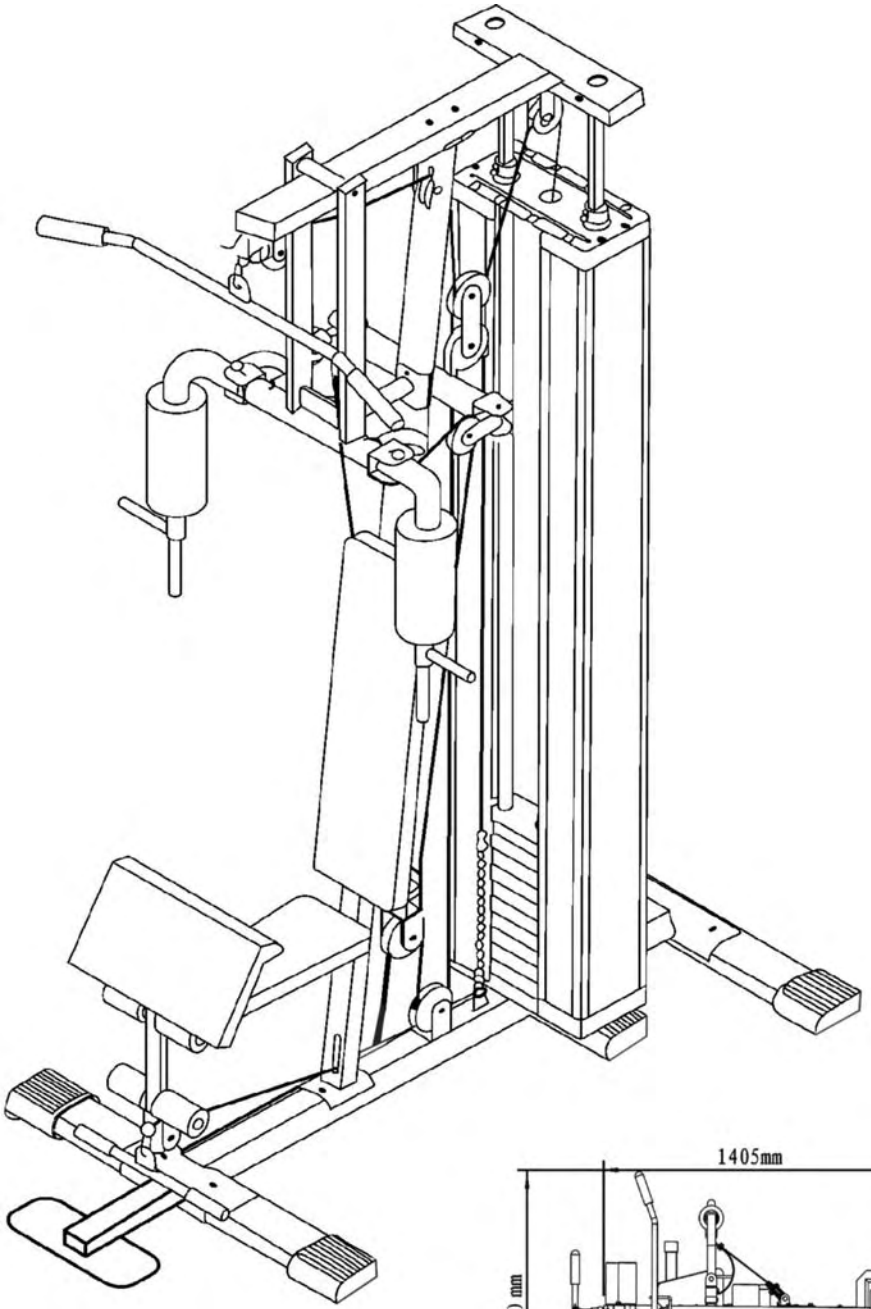

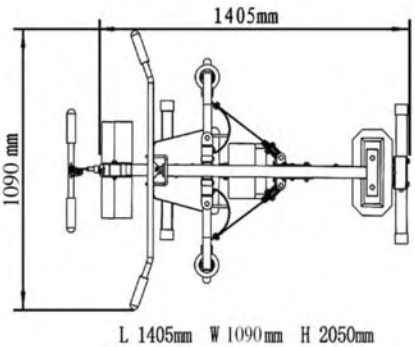

L 1405mm W 1090mm H 2050mm

Important Safety Information

Please keep this manual in a safe place for reference.

1. It is important to read this entire manual before assembling and using the equipment. Safe and efficient use can only be achieved if the equipment is assembled, maintained and used properly. It is your responsibility to ensure that all users of the equipment are informed of all warnings and precautions.

2. Before starting any exercise program you should consult your doctor to determine if you have any physical or health conditions that could create a risk to your health and safety, or prevent you from using the equipment properly. Your doctor's advice is essential if you are taking medication that affects your heart rate, blood pressure or cholesterol level.

3. Be aware of your body's signals. Incorrect or excessive exercise can damage your health. Stop exercising if you experience any of the following symptoms: Pain, tightness in your chest, irregular heartbeat, extreme shortness of breath, feeling light headed, dizzy or nauseous. If you do experience any of these conditions you should consult your doctor before continuing with your exercise program.

4. Keep children and pets away from the equipment. The equipment is designed for adult use only.

5. Use the equipment on a solid, flat level surface with a protective cover for your floor or carpet. For safety, the equipment should have at least 0.5 meter of free space all around it.
6. Before using the equipment, check the nuts and bolts are securely tightened.

7. The safety level of the equipment can only be maintained if it is regularly Examined for damage and/or wear and tear.

8. Always use the equipment as indicated. If you find any defective components whilst assembling or checking the equipment, or if you hear any unusual noise coming from the equipment during use, stop. Do not use the equipment until the problem has been rectified.

9. Wear suitable clothing whilst using the equipment. Avoid wearing loose clothing which may get caught in the equipment or that may restrict or prevent movement.

10. The equipment is not suitable for therapeutic use.

11. Care must be taken when lifting or moving the equipment so as not to injure your back. Always use proper lifting techniques and/or use assistance.

ASSEMBLY DRAWING

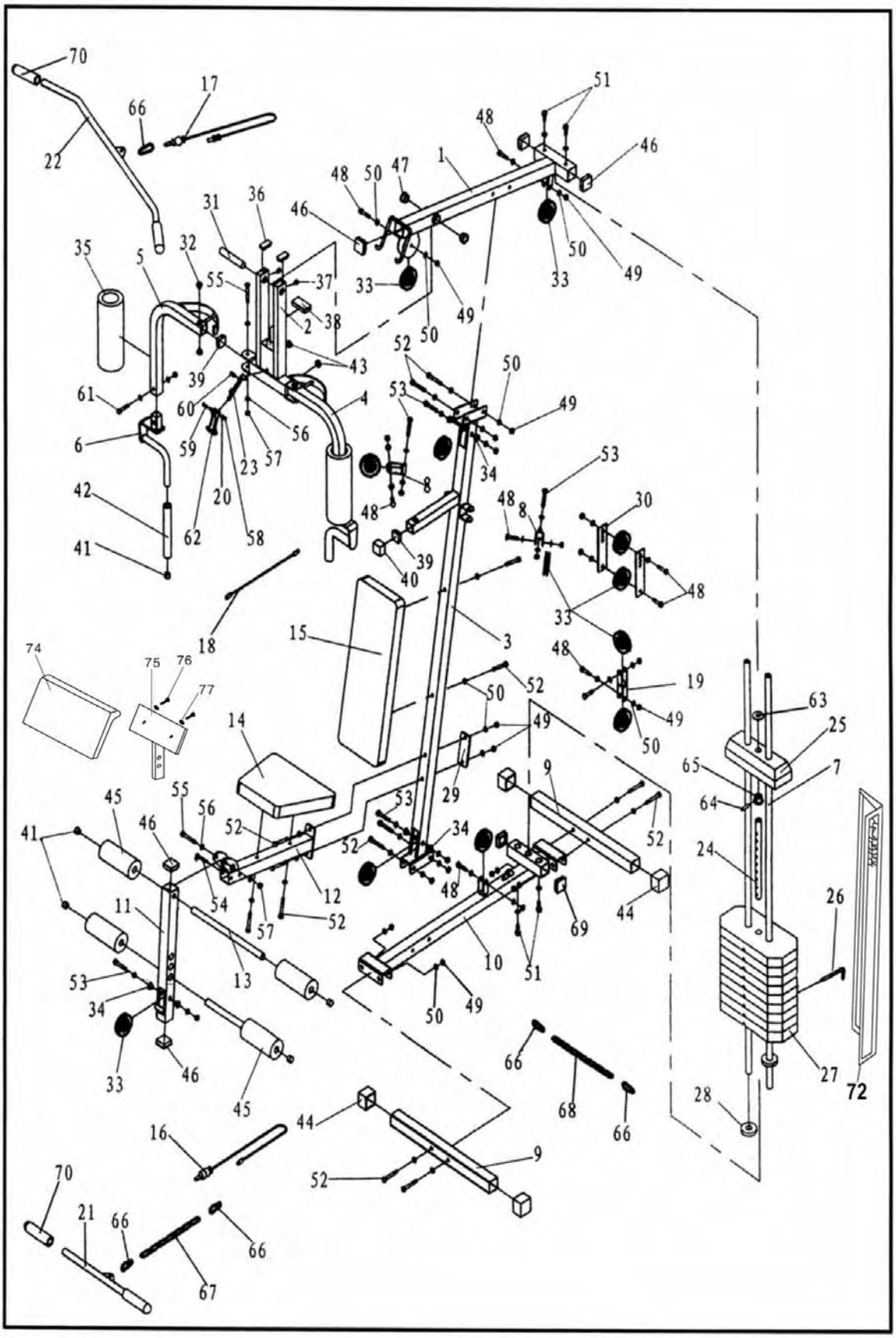

All listed plastic attachments have already been assembled by the manufacture, plastic handle excepted.

ASSEMBLY INSTRUCTIONS

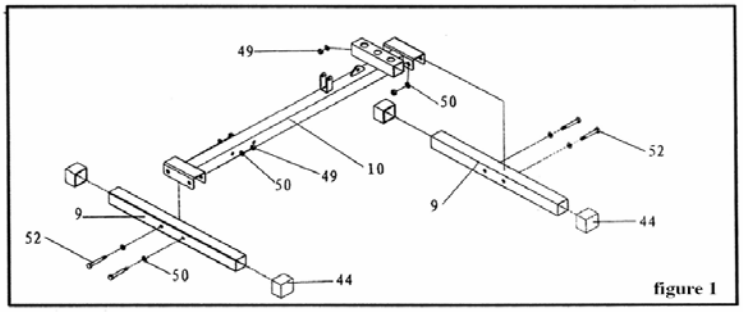

figure 1

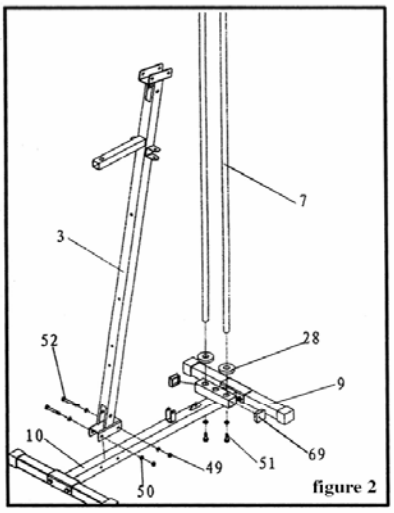

figure 2

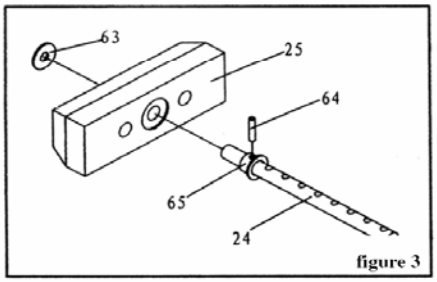

figure 3

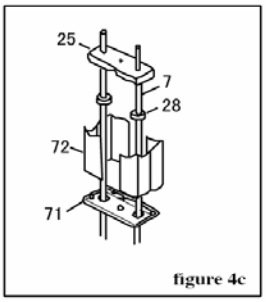

figure 4c

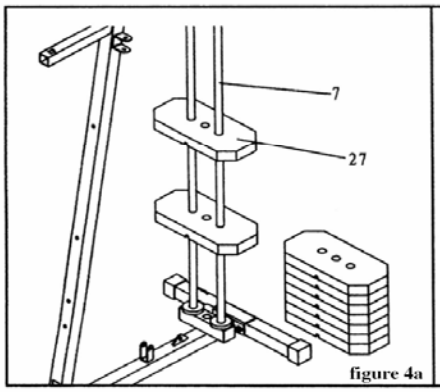

figure 4a

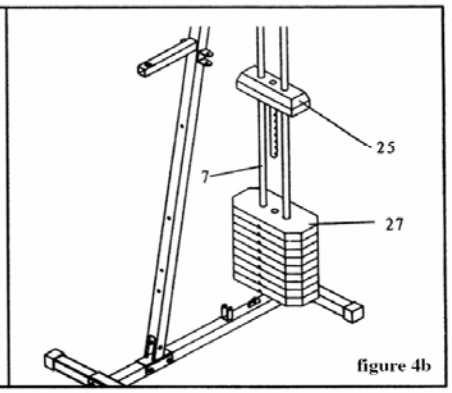

figure 4b

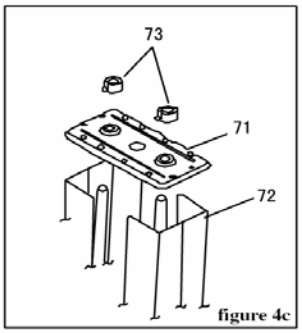

figure 4c

STEP 1:

For this step you need to use the parts are packed in the bags labeled 'PART 1'.

1. ATTACH FRONT (9) AND BACK (9) STABILIZING BASES TO MAIN BASE (10). ATTACH VERTICLE BEAM (3) TO MAIN BASE (10); AS SHOWN IN THE FIGURE1
2. INSERT THE GUIDE RODS (7) TOGETHER WITH THE RUBBER DONUTS (28) ATTACHED ON THE BOTTOM AND THE WEIGHT COVER SUPPORT ON THE MAIN BASE (10) AS SHOWN IN THE FIGURE4c, AND SCREW THE GUIDE ROD(7) TO THE MAIN BASE (10). SLIDE EACH WEIGHT PLATE (27) ALONG THE GUIDE ROD (7); AS SHOWN IN THE FIGURE 4a AND FIGURE 4b. (NOTE: GROOVE FOR SELECTOR PIN ON WEIGHTPLATES SHOULD FACE DOWN).
3. ATTACH GUIDE PIN (24) TO TOP PLATE (25) THEN ONTO GUIDE RODS (7) AS SHOWN IN THE

FIGURE1 AND FIGURE3 AND INTO WEIGHT STACK.

5. FIT THE WEIGHT COVER PLATES (72) WHICH HAS PREVIOUSLY BEEN FITTED TO THE BOTTOM. FIT THE OTHER SUPPORT (71) ON THE TOP OF THE PLATES (72), SECURING THE UNIT WITH THE PROTECT HOLDERS (73).

ASSEMBLY INSTRUCTIONS

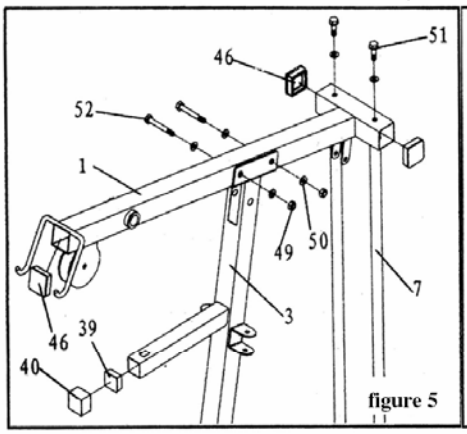

figure 5

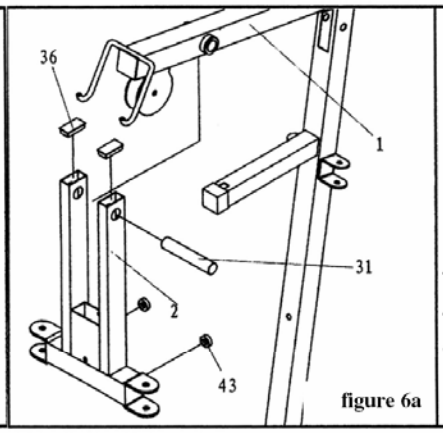

figure 6a

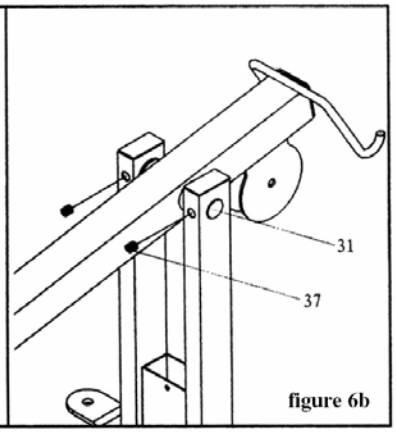

figure 6b

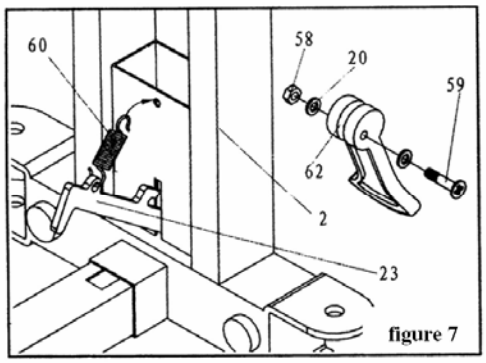

figure 7

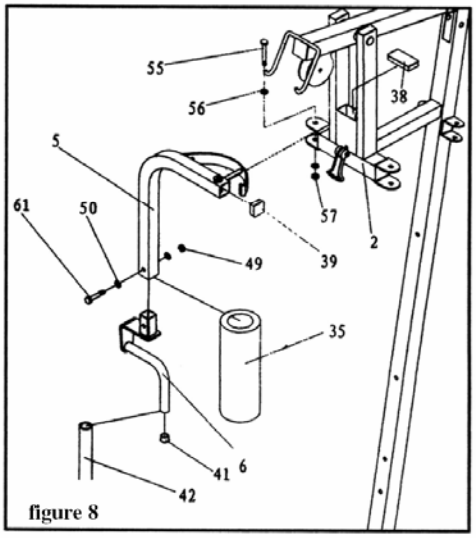

figure 8

STEP 2:

For this step you need to use the parts are packed in the bags labeled 'PART 2'.

1. USING THE BOLT(52) AND THE NUTS/RINGS(50,49) ATTACH TOP CROSS BEAM(1) TO VERTICAL BEAM (3) AND INSERT GUIDE RODS (7) INTO THE HOLES IN THE TOP BEAM AND SCREW THE GUID ROD BY USING THE BOLT(51) AS SHOWN IN THE FIGURE 4a AND FIGURE 5. (DO NOT TIGHTEN AT THIS STAGE)
2. USING Φ20PIN (31) ATTACH THE PRESSBAR (2) TO TOP CROSS BEAM (1), AND LOCK THE BOLT (37). AS SHOWN IN THE FIGURE 6a AND FIGURE 6b.
3. PUT THE HOOK(23)THROUGH THE HOLE OF THE PRSS BAR,THEN ATTACH THE HOOK(23) TO THE PLASTIC HANDLE(62) BY USING THE BOLT(59) AND NUT(58) ;CONNECT THE HOOK TO THE HOLE OF THE PRESS BAR BY THE SPRING(60) AS SHOWN IN THE FIGURE 4a AND FIGURE 7.

4. FIX BOTH PEC DECK ARMS(4,5)) TO PRESS BAR ASSEMBLY (2) USING BOLTS(55), RINGS/NUTS(56,57) ;SLIDE PEC DECK PADS (35) ONTO BOTH ENDS OF PEC DECK ARMS (4,5)
ATTACH PRESS HANDLE BAR (6) USING HEX BOLT(61) AND RINGS/NUT (50,61) TO PEC DECK ARMS(4,5); MOISTEN THE INSIDE OF THE FOAM GRIP(42) WITH HOUSEHOLD FURTITURE POLISH (LIQUID) AND SLIDE ONTO BOTH ENDS OF THE PRESS HANDLE BAR. AS SHOWN IN THE FIGURE 4a AND FIGURE 8.

ASSEMBLY INSTRUCTIONS

STEP 3

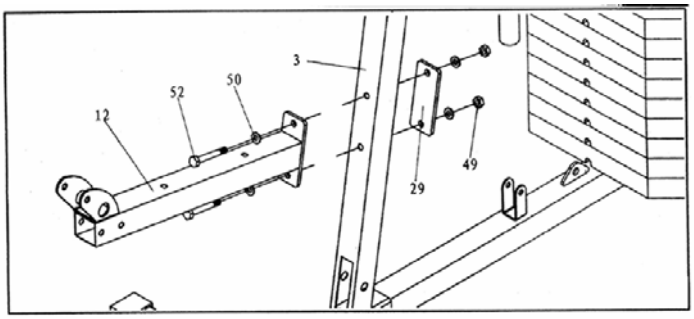

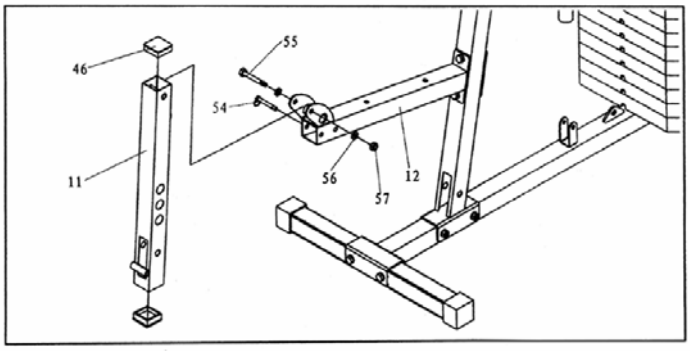

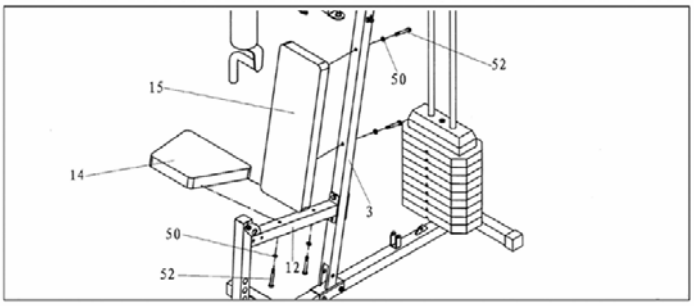

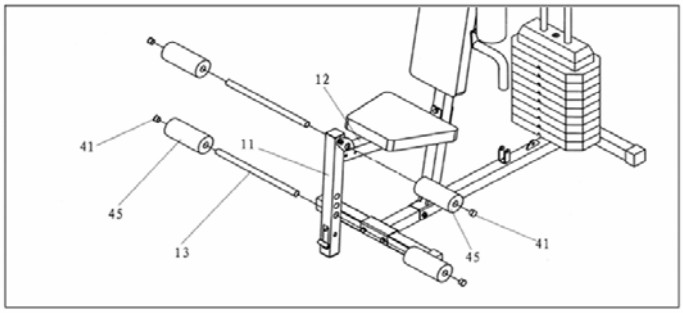

For this step you need to use the parts are packed in the bags labeled 'PART 3'.

1) ATTACH SEAT SUPPORT (12) AND STRENGTH SUPPORT BLOCK (29) TO VERTICAL BEAM (3) AND ATTACH LEG EXTENSION (11) TO SEAT SUPPORT (12). INSERT PAD HOLDERS (13) AND PUSH ON FOAM PADS (45).

2) ATTACH BACK CUSHION (15) TO VERTICAL BEAM (3) AND SEAT (14) TO SEAT SUPPORT (12).

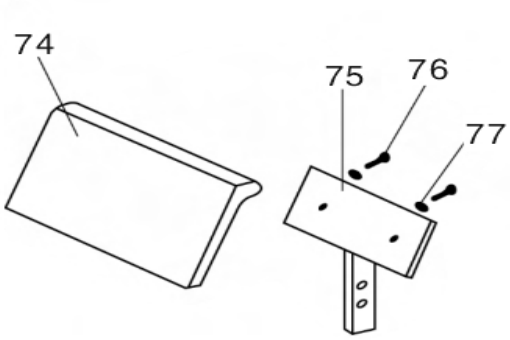

3) Join the metal support for the biceps rest (74) to its cushion (75), using screws (76) and washers (77). Insert the round plastic guide (46) in the extension lever (11).

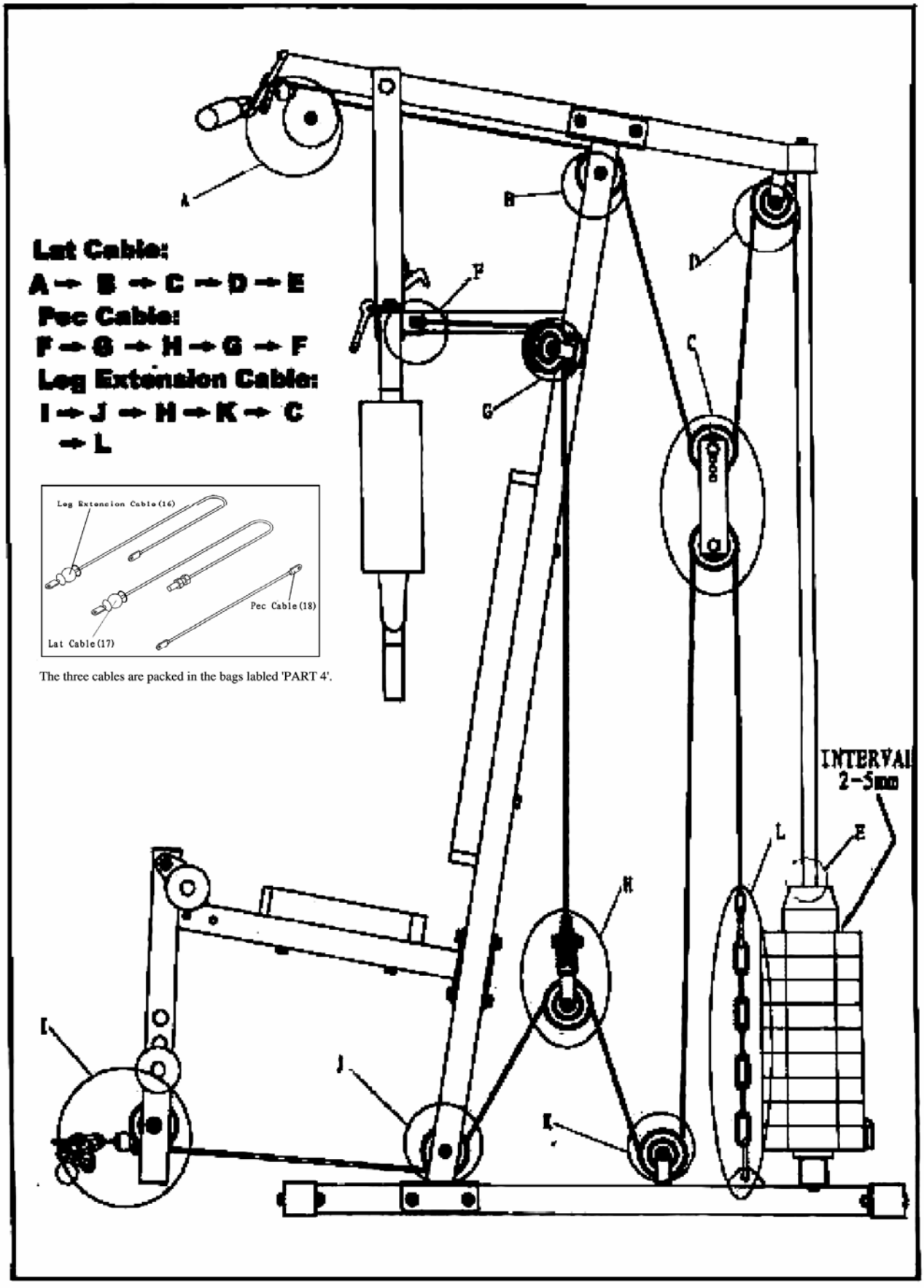
Lat Cable:
A → B → C → D → E
Pec Cable:
F → G → H → G → F
Leg Extension Cable:
I → J → H → K → C
→ L
Leg Extension Cable (16)
Pec Cable (18)
Lat Cable (17)
The three cables are packed in the bags labled 'PART 4'.
INTERVAL
2-5mm
A
B
C
D
E
F
G
H
I
J
K
L

STEP 4

ASSEMBLY INSTRUCTIONS

For this step you need to use the parts are packed in the bags labeled 'PART 5'.

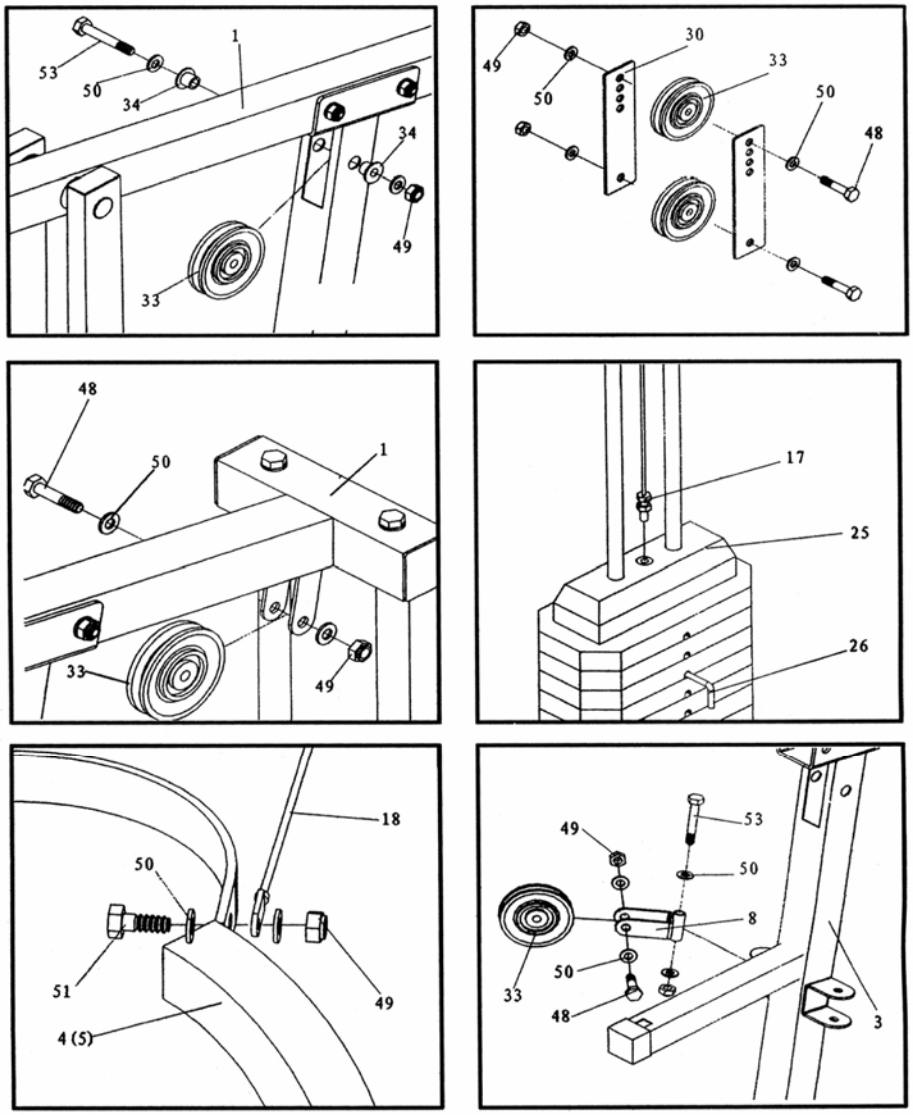

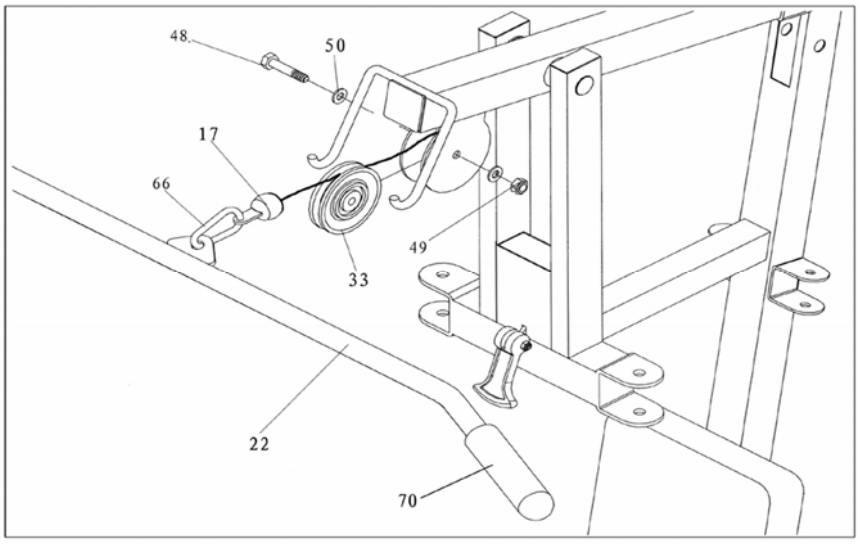
48
50
17
66
49
33
22
70

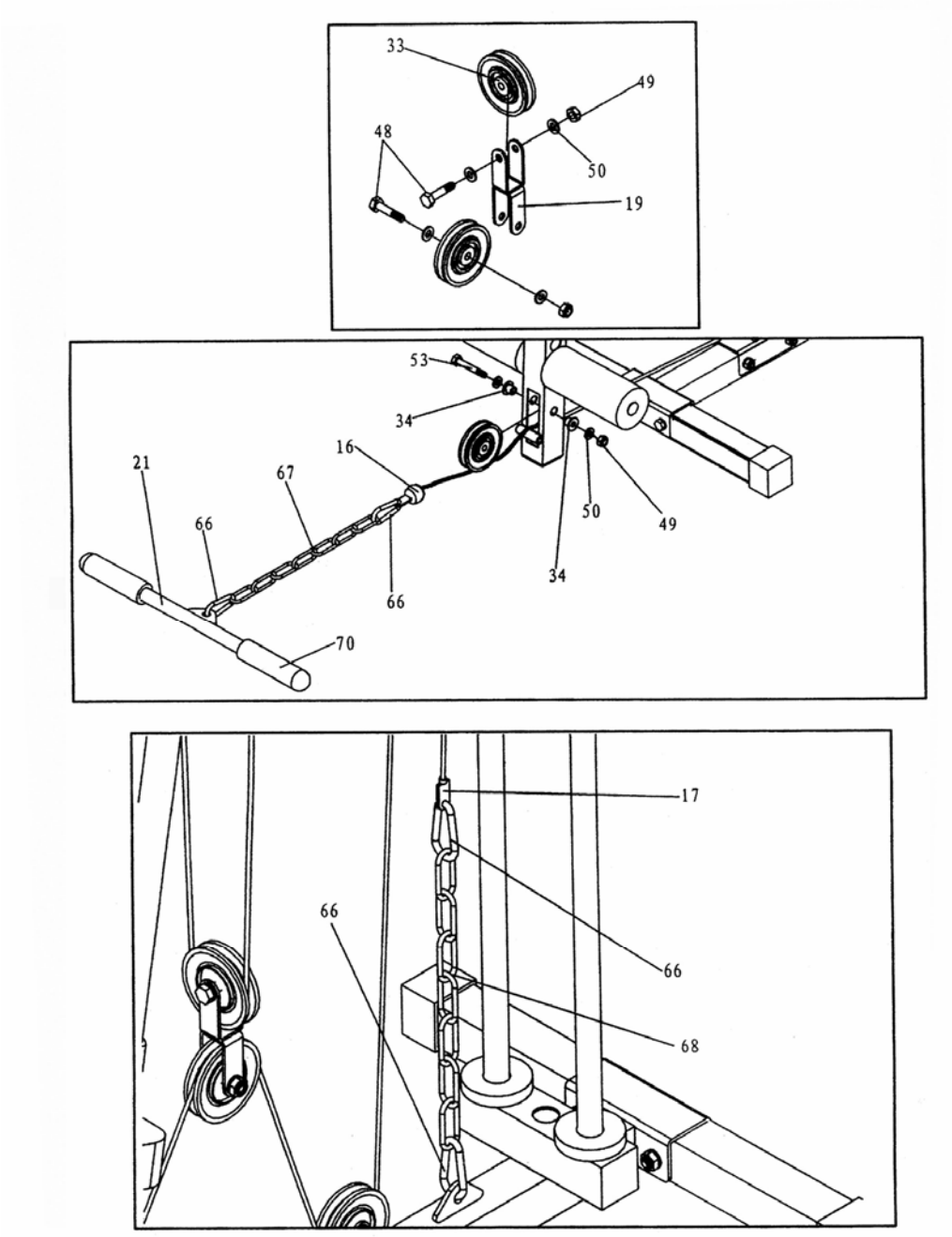

For this step you need to use the parts are packed in the bags labeled 'PART 5'.

1) THREAD ALL THREE CABLES THROUGH GYM, ASSEMBLE AND ATTACH PULLEY WHEELS AS SHOWN IN EACH EXPLODED VIEW. (*NOTE: CABLES AND PULLEY WHEELS MUST BE THREADED AND ASSEMBLED AT THE SAME TIME)
2) CABLE POSITIONS ARE:
   LEG EXTENSION CABLE: FROM LEG EXTENSION TO FRAME WITH CHAIN (L);
   PEC CABLE: FROM LEFT PEC DECK ARM TO RIGHT PEC DECK ARM;
   LAT CABLE: FROM LAT BAR TO WEIGHT STACK TOP PLATE (25).
3) THE CHAIN (68) AND TWO SNAP HOOKS (66) ARE USED TO ADJUST SLACKNESS FROM CABLES; TIGHTEN ALL NUTS AND BOLTS

EXERCISE INSTRUCTION

1 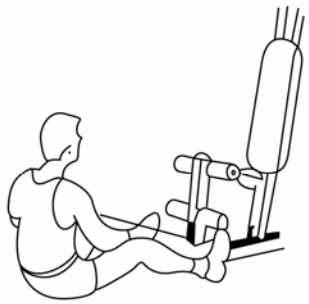	2 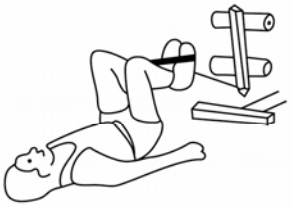	3 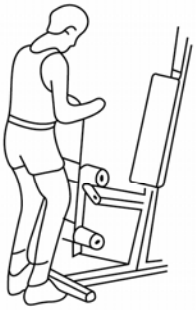
4	5	6
7 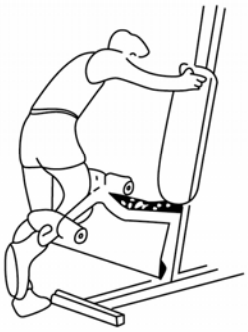	8	9 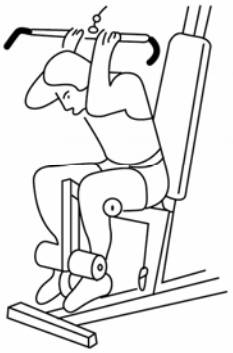

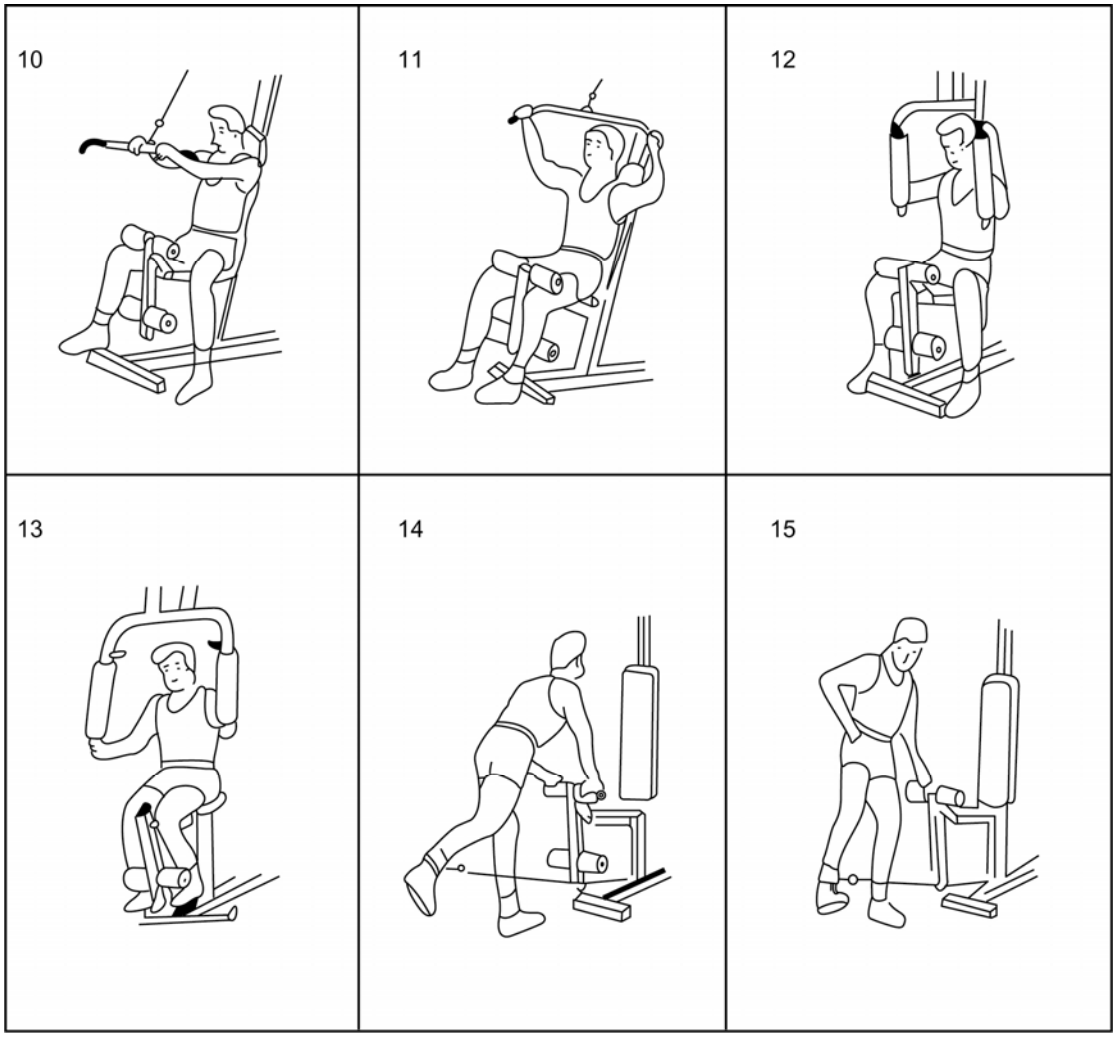

WARNINGS

PRIOR TO UNDERTAKING ANY PROGRAM OF EXERCISE THAT REQUIRES A MAJOR INCREASE IN PHYSICAL ACTIVITY, CONSULTATION WITH A COMPETENT MEDICAL AUTHORITY IS STRONGLY RECOMMENDED. IN ADDITION, ANYONE WHO HAS A PHYSICAL HANDICAP, SUFFERS FROM A PROLONGED ILLNESS, OR WHO HAS INCREASED RISK FACTORS SUCH AS OBESITY, HYPERTENSION, CARDIO-CIRCULATORY PROBLEMS, ETC., SHOULD CONSULT A COMPETENT MEDICAL AUTHORITY BEFORE UNDERTAKING ANY EXERCISE OR ENGAGING IN A CONTINUING PROGRAM OF EXERCISING.

1. PLEASE READ THROUGH INSTRUCTIONS CAREFULLY BEFORE STARTING TO ASSEMBLE.
2. BE SURE ALL THE PARTS ARE SECURELY TIGHTENED. FAILURE TO DO SO MAY RESULT IN MECHANICAL FAILURE OR PERSONAL INJURY.
3. WE RECOMMEND TWO PEOPLE FOR PROPER ASSEMBLY OF THE HOME GYM.